Lee County
Southwest Florida

APPLICATION TO AMEND A PLANNED DEVELOPMENT OR PUD and/or APPLICATION FOR FINAL PLAN APPROVAL IN UNINCORPORATED AREAS ONLY

[LDC Section 34-380 or 34-1037]

Project Name: MCWILLIAMS LANAI

Current Zoning: RPD

☒ Amendment to a PD or PUD to allow: Amendment of lot coverage from 45.5% to allow proposed lanai extension

☐ Final Plan Approval for: _____

1. **Name of Applicant:** TERRY AND MARIA MCWILLIAMS
   Address: 9291 Aegean Circle
   City, State, Zip: Lehigh Acres FL 33936
   Phone Number: 248-974-6485
   E-mail Address: TERRY.MCWILLIAMS@att.net

2. **Relationship of Applicant to owner (check one) and provide Affidavit of Authorization form:**
   ☒ Applicant is the sole owner of the property. **[34-201; 34-204]**
   ☐ Applicant has been authorized by the owner(s) to represent them for this action. **[34-202; 34-204]**

3. **Authorized Agent: (If different than applicant) Name of the person who is to receive all County-initiated correspondence regarding this application. [34-202; 34-204]**
   a. **Company Name:** _____
   Contact Person: _____
   Address: _____
   City, State, Zip: _____
   Phone Number: _____ Email: _____

   b. **Additional Agent(s):** Provide the names of other agents that the County may contact concerning this application. **[34-202; 34-204]**

4. **Property owner(s): If multiple owners (corporation, partnership, trust, association), provide a list with owner interest. [34-201; 34-204]**
   Name: _____
   Address: _____
   City, State, Zip: _____
   Phone Number: _____ E-mail: _____

5. **Disclosure of Interest [34-201; 34-204]:**
   ☐ Attach Disclosure of Interest Form. **[34-201; 34-204]**

6. **STRAP Number(s) [34-204]:** 06-45-27-11-00000.0970

7. **Street Address of Property:** 9291 Aegean Circle Lehigh Acres, FL 33936

LEE COUNTY COMMUNITY DEVELOPMENT
PO BOX 398 (1500 MONROE STREET), FORT MYERS, FL 33902
PHONE (239) 533-8585

ADD2018-00039

8. **Legal Description (must submit one):**
   - ☐ Legal description (metes and bounds) and sealed sketch of the legal description. **[34-204]**
   - **OR**
   - ☒ Legal description (NO metes and bounds) if the property is located within a subdivision platted per F.S. Chapter 177, and is recorded in the Official Records of Lee County under Instruments or Plat Books. (Click here to see an example of a legal description with no metes and bounds.) **[34-204]**

9. **Lee Plan (Future Land Use) Designation [34-204]:** CENTRAL URBAN

10. **Original Project Name:** VISTANNA RPD

11. **Original Rezoning Resolution Number:** Z-04-062

12. **Subsequent Zoning Action Resolution/Case Numbers** (if any): Please list all previous zoning and administrative actions (approvals and denials) on this project subsequent to original rezoning. Include Resolution Numbers and Case Numbers (provide added sheets, if necessary).

N/A

13. **Development Order Numbers** (if any): List all local development orders approved on this project. Please indicate the status of each development order (provide added sheets, if necessary).

N/A

14. **Written Narrative:** Provide a written narrative statement explaining exactly what is proposed.

15. **Deviations:** If any relief is requested from the provisions of the Lee County Land Development Code (LDC), provide a **written explanation** of the specific relief requested (a schedule of deviations). Explain what conditions currently exist which warrant this request for relief from the regulations (a written justification for each of the requested deviations). Include specific references to any section (number{s} and name{s}) of the LDC from which relief is sought including why the requested relief is necessary and how it will affect the project. All deviation requests must be specifically keyed to the location on the Master Concept Plan or Final Plan. **[34-373]** N/A

16. **Planning Community or Community Plan Area*:** Lehigh Acres
*If in Caloosahatchee Shores **[33-1482]**, Captiva **[33-1612]**, Estero **[33-64]**, Lehigh Acres **[33-1401]**, North Fort Myers **[33-1532]**, North (Upper) Captiva **[33-1711]**, or Page Park **[33-1203]**, attach meeting summary from informational meeting.

17. **Approved Master Concept Plan (MCP):** Provide an APPROVED MCP and DETAILED DRAWINGS of any DEVIATIONS OR CHANGES BEING PROPOSED at a size of 24"x36". **[34-204; 34-373]**

18. **Proposed Final Plan (for Final Plan Approval applications only):** Provide a copy of the proposed Final Plan consistent with the approved Master Concept Plan and the approved Zoning Resolution at a size of 24"x36". This proposed Final Plan must show any DEVIATION(s) keyed on the plan to identify the location of the specific deviation. **[34-204]**

SUBMITTAL REQUIREMENT CHECKLIST *Clearly label your attachments as noted in bold below.*	
☐	Completed application [34-204]
☐	Filing Fee [34-204]
☐	**Affidavit of Authorization** Form [34-204; 34-202]
☐	**Additional Agents** [34-204; 34-202]
☐	**Multiple Owners** List (if applicable) [34-201; 34-204]
☐	**Disclosure of Interest** Form [34-204; 34-201]
☐	**Legal description (must submit one)** [34-204]
☐	Legal description (metes and bounds) and sealed sketch of legal description
	OR
☐	Legal description (NO metes and bounds) if the property is located within a subdivision platted per F.S. Chapter 177, and is recorded in the Official Records of Lee County under Instruments or Plat Books. (Click here to see an example of a legal description with no metes and bounds.)
☐	**Previous Zoning Actions** (if applicable)
☐	**DO Numbers** (if applicable)
☐	**Narrative of Request** [34-204]
☐	**Schedule of Deviations** (if applicable) [34-373]
☐	**Meeting Summary** (if applicable) [34-204)
☐	**MCP** and detailed drawings of any proposed deviations (if applicable) (24"x36") [34-204]
☐	**Proposed Final Plan** including deviations keyed to the plan (24"x36") [34-204]

Note: All information submitted with the application becomes a part of the public record and will be a permanent part of the file. Department staff will review this application for compliance with requirements of the Lee County Land Development Code. The applicant will be notified of any deficiencies.

Acceptance of an application for an administrative amendment in no way guarantees its approval. If the Director determines that the requested amendment is beyond the scope of Land Development Code Section 34-380 or 34-1036 and that a public hearing is necessary, then all fees paid toward the administrative application may be applied toward an application for public hearing.

The Director's decision on an administrative amendment is final and can not be appealed. In the event the Director denies the request, the applicant's only recourse is to apply for a public hearing. No fees paid for the administrative application will be refunded or applied towards the public hearing.

If it is determined that inaccurate or misleading information was provided to the county or the decision does not comply with the Land Development Code when rendered, then, at any time, the Director may issue a modified decision that complies with the Code or revoke the decision. If the approval is revoked, the applicant may acquire the necessary approvals by filing an application for public hearing in accordance with Chapter 34.

DISCLOSURE OF INTEREST AFFIDAVIT

BEFORE ME this day appeared Terry McWilliams, who, being first duly sworn and deposed says:

1. That I am the record owner, or a legal representative of the record owner, of the property that is located at 9291 Aegean Circle Lehigh Acres FL and is the subject of an Application for zoning action (hereinafter the "Property").

2. That I am familiar with the legal ownership of the Property and have full knowledge of the names of all individuals that have an ownership interest in the Property or a legal entity owning an interest in the Property.

[OPTIONAL PROVISION IF APPLICANT IS CONTRACT PURCHASER: In addition, I am familiar with the individuals that have an ownership interest in the legal entity that is under contract to purchase the Property.]

3. That, unless otherwise specified in paragraph 6 below, no Lee County Employee, County Commissioner, or Hearing Examiner has an Ownership Interest in the Property or any legal entity (Corporation, Company, Partnership, Limited Partnership, Trust, etc.) that has an Ownership Interest in the Property or that has contracted to purchase the Property.

4. That the disclosure identified herein does not include any beneficial Ownership Interest that a Lee County Employee, County Commissioner, or Hearing Examiner may have in any entity registered with the Federal Securities Exchange Commission or registered pursuant to Chapter 517, whose interest is for sale to the general public.

5. That, if the Ownership Interest in the Property changes and results in this affidavit no longer being accurate, the undersigned will file a supplemental Affidavit that identifies the name of any Lee County Employee, County Commissioner, or Hearing Examiner that subsequently acquires an interest in the Property.

6. Disclosure of Interest held by a Lee County Employee, County Commissioner, or Hearing Examiner.

Name and Address	Percentage of Ownership

Under penalty of perjury, I declare that I have read the foregoing and the facts alleged are true to the best of my knowledge and belief.

TERRY MCWILLIAMS
Property Owner

Print Name

************NOTE: NOTARY PUBLIC IS NOT REQUIRED FOR ADMINISTRATIVE APPROVALS************
ALL OTHER APPLICATION TYPES MUST BE NOTARIZED

STATE OF FLORIDA
COUNTY OF LEE

The foregoing instrument was sworn to (or affirmed) and subscribed before me on _____ (date) by _____ (name of person providing oath or affirmation), who is personally known to me or who has produced _____ (type of identification) as identification.

STAMP/SEAL

Signature of Notary Public

ADD2018-00039 Lee County ePlan

AFFIDAVIT OF AUTHORIZATION

APPLICATION IS SIGNED BY INDIVIDUAL OWNER, APPLICANT, CORPORATION, LIMITED LIABILITY COMPANY (L.L.C.), LIMITED COMPANY (L.C.), PARTNERSHIP, LIMITED PARTNERSHIP, OR TRUSTEE

I, Terry McWilliams (name), as OWNER (owner/title) of 9291 Aegean Circle Lehigh Acres (company/property), swear or affirm under oath, that I am the owner or the authorized representative of the owner(s) of the property and that:

1. I have full authority to secure the approval(s) requested and to impose covenants and restrictions on the referenced property as a result of any action approved by the County in accordance with this application and the Land Development Code;
2. All answers to the questions in this application and any sketches, data or other supplementary matter attached hereto and made a part of this application are honest and true;
3. I have authorized the staff of Lee County Community Development to enter upon the property during normal working hours for the purpose of investigating and evaluating the request made thru this application; and that
4. The property will not be transferred, conveyed, sold or subdivided unencumbered by the conditions and restrictions imposed by the approved action.

Notes:

- *If the applicant is a corporation, then it is usually executed by the corp. pres. or v. pres.*
- *If the applicant is a Limited Liability Company (L.L.C.) or Limited Company (L.C.)., then the documents should typically be signed by the Company's "Managing Member."*
- *If the applicant is a partnership, then typically a partner can sign on behalf of the partnership.*
- *If the applicant is a limited partnership, then the general partner must sign and be identified as the "general partner" of the named partnership.*
- *If the applicant is a trustee, then they must include their title of "trustee."*
- *In each instance, first determine the applicant's status, e.g., individual, corporate, trust, partnership, estate, etc., and then use the appropriate format for that ownership.*

Under penalties of perjury, I declare that I have read the foregoing Affidavit of Authorization and that the facts stated in it are true.

Signature

1-20-18
Date

*************NOTE: NOTARY PUBLIC IS NOT REQUIRED FOR ADMINISTRATIVE APPROVALS*************
ALL OTHER APPLICATION TYPES MUST BE NOTARIZED

STATE OF FLORIDA
COUNTY OF LEE

The foregoing instrument was sworn to (or affirmed) and subscribed before me on _____ (date) by _____ (name of person providing oath or affirmation), who is personally known to me or who has produced _____ (type of identification) as identification.

STAMP/SEAL

Signature of Notary Public

ADD2018-00039 Lee County ePlan

Overview of Lehigh review board meeting on 2-19-18

The meeting for the Leghigh community review board was headed by Rick Anglickis. I was called up to present to the group as the second order of agenda.

I introduced myself to the group, and I went through some of the trials and delays that my wife and I have been through trying to accomplish a Lanai expansion at our condo. I stressed that we are trying to match the architectural materials and sizing that the other lanai expansions have followed—with 90+ % of the Lanais being expanded by Lehigh Aluminum. Of course, I included drawings, and reference items that they had requested.

I explained that our lanai permit request was submitted by contractor Lehigh Aluminum in July of 2017, but the permit was denied. And, that my main purpose at this Lehigh review meeting was to receive their approval to proceed.

The board voted and gave us approval to proceed. Mr Anglickis said that "moments of the meeting" would be sent to us in about 10 days. He also added that we would have to have an approval for this project signed off by our condo association. That necessary paperwork has been submitted to Vision Golf Management, and we await their response.

Terry McWilliams
9291 Aegean Circle
Lehigh Acres, FL 33936

I submit this overview on 2-27-18

Terry M. McWilliams

Revised Lanai Dimension

Sisiruca McWilliams
9291 Aegean Cir.
Lehigh Acres, Fl.33936

150 M.P.H. Exposure B

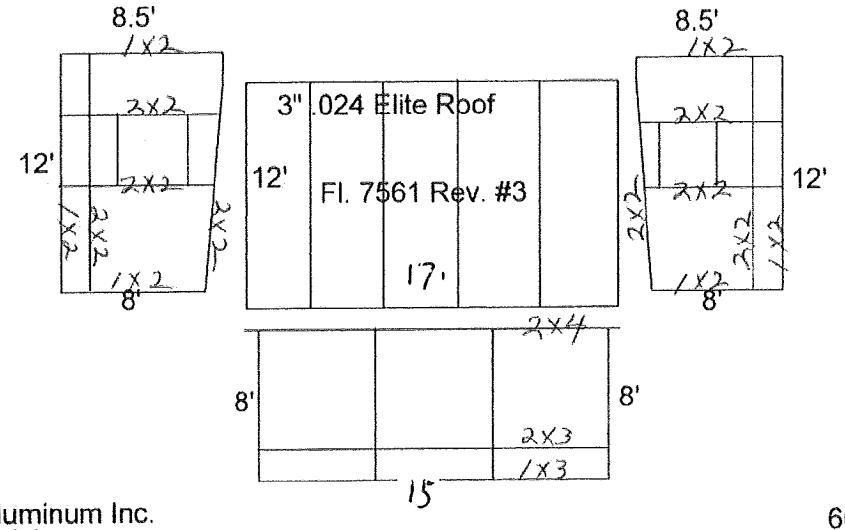

Lehigh Aluminum Inc.
10 Edward Ave.
Lehigh Acres, Fl. 33936

6005 T-5 Aluminum Alloy
2X4X.050
2X3X.050
2X2X.044
1X2X.044
1X3X.044
3" Box Header x.062
12' 3" .024 Elite Panels

ADD2018-00039 Lee County ePlan

RES2005-09649

DESCRIPTION:

PROPOSED LOTS 97 & 98, VISTANNA VILLAS, PLAT BOOK 82 PAGES 32-37, LEE COUNTY PUBLIC RECORDS, LYING IN SECTION 6, T-45-S, R-27-E, LEE COUNTY, FLORIDA.

NOTES:

THIS PLAT PREPARED AS A SITE PLAN.

LAND DESCRIPTION AS SHOWN HEREON WAS PROVIDED BY THE CLIENT.

THIS SITE PLAN PREPARED BASED ON PROPOSED PLAT OF VISTANNA VILLAS.

RETAIN FOR CODES & BUILDING B.P. FILE

RETAIN FOR CODES & BUILDING B.P. FILE

6-8-05

CONSTRUCTION DRAWINGS MASTER ON FILE AT BLD. DEPT
DA 2005-09649
Request 01702

MUST MAINTAIN 10' BETWEEN STRUCTURES

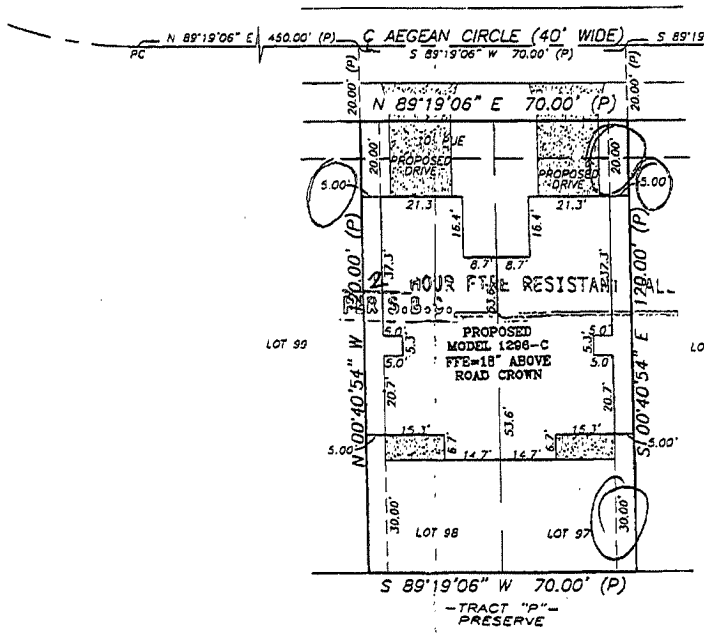

LEE COUNTY DEVELOPMENT SERVICES
RESIDENTIAL ZONING REVIEW
APPROVED
By [illegible] Date 6/8/05
for Zoning Manager
Approval does not constitute a guarantee or warranty that all other applicable codes and regulations will be met.

LEGEND:

⊕	CLEANOUT
5.5'	EXISTING ELEVATION
⊛	FOUND NAIL & DISK
○	FOUND 5/8" IRON ROD METRON LB 7071
●	SET 5/8" I.R. BANKS ENG. LB 6690
◎	CABLE TELEVISION RISER
⊞	ELECTRIC SERVICE
+/-	PLUS OR MINUS
○	TELECOMMUNICATION SERVICE
⊠	ELECTRIC TRANSFORMER PAD
△	WATER METER
⧖	WATER VALVE
℄	CENTERLINE
CONC	CONCRETE
UE	UTILITY EASEMENT
EOP	EDGE OF PAVEMENT
EOW	EDGE OF WATER
FFE	FINISHED FLOOR ELEVATION
FND	FOUND
ID	IDENTIFICATION NUMBER
IR	IRON ROD
LB	LICENSED BUSINESS
LS	LICENSED SURVEYOR
LME	LAKE MAINTENANCE EASEMENT
PC	POINT OF CURVATURE
PI	POINT OF INTERSECTION
PRC	POINT OF REVERSE CURVE
PK	PARKER KALON CONCRETE TYPE NAIL
PCP	PERMANENT CONTROL POINT
PSM	PROFESSIONAL SURVEYOR AND MAPPER
PCC	POINT OF COMPOUND CURVE
ROW	RIGHT-OF-WAY
TOB	TOP OF BANK
(C)	CALCULATED
(M)	AS FIELD MEASURED
(P)	PLATTED
(NR)	NON RADIAL LINE
(R)	RADIAL
▨	INDICATES CONCRETE

SURVEYOR'S CERTIFICATION:

I HEREBY CERTIFY TO THE BEST OF MY PROFESSIONAL KNOWLEDGE, THAT THIS PLAT OF THE HEREON DESCRIBED PROPERTY IS A TRUE REPRESENTATION OF A SITE PLAN MADE UNDER MY DIRECTION AND MEETS THE MINIMUM TECHNICAL STANDARDS SET FORTH IN CHAPTER 61G17-6, FLORIDA ADMINISTRATIVE CODE, PURSUANT TO SECTION 472.027, FLORIDA STATUTES.

A. Lee Hayne 5-20-05

A. LEE HAYNE, P.S.M. DATE

FLORIDA CERTIFICATION NO. 6336

- THIS SITE PLAN IS NOT VALID WITHOUT THE SIGNATURE AND THE ORIGINAL RAISED SEAL OF A FLORIDA LICENSED SURVEYOR AND MAPPER.
- ADDITIONS OR DELETIONS TO SURVEY MAPS OR REPORTS BY OTHER THAN THE SIGNING PARTY OR PARTIES IS PROHIBITED WITHOUT WRITTEN CONSENT OF THE SIGNING PARTY OR PARTIES.
- THIS CERTIFICATION IS ONLY FOR THE LANDS DESCRIBED HEREON.
- IT IS NOT A CERTIFICATION OF TITLE, ZONING, SETBACKS, OR FREEDOM OF ENCUMBRANCES.
- THIS SITE PLAN WAS PREPARED WITHOUT BENEFIT OF ABSTRACT OF TITLE AND ALL MATTERS OF TITLE SHOULD BE REFERRED TO AN ATTORNEY AT LAW

Banks Engineering, Inc.
Professional Engineers, Planners & Land Surveyors
FORT MYERS • NAPLES • SARASOTA • CHARLOTTE

SITE PLAN FOR:
KB HOME FORT MYERS LLC
LEE COUNTY, FLORIDA

DATE	PROJECT	DRAWING	DRAWN	CHECKED	SHEET	OF	REVISED
5-20-2005	00-01	SITE PLAN	JPT	JCH	1	1	

ADD2018-00039 Lee County ePlan

RES2006-06225

DESCRIPTION:

LOTS 91 & 92, VISTANNA VILLAS, PLAT BOOK 82 PAGES 32-37, LEE COUNTY PUBLIC RECORDS, LYING IN SECTION 6, T-45-S, R-27-E, LEE COUNTY, FLORIDA.

NOTES:

THIS PLAT PREPARED AS A SITE PLAN.

LAND DESCRIPTION AS SHOWN HEREON WAS PROVIDED BY THE CLIENT.

THIS SITE PLAN PREPARED BASED ON PROPOSED PLAT OF VISTANNA VILLAS.

RETAIN FOR CODES & BUILDING B.P. FILE

LEGEND:

⊕	CLEANOUT
5.5'	EXISTING ELEVATION
⊛	FOUND NAIL & DISK
○	FOUND 5/8" IRON ROD METRON LB 7071
●	SET 5/8" I.R. BANKS ENG. LB 6690
◎	CABLE TELEVISION RISER
⊞	ELECTRIC SERVICE
+/-	PLUS OR MINUS
○	TELECOMMUNICATION SERVICE
⊠	ELECTRIC TRANSFORMER PAD
△	WATER METER
⧖	WATER VALVE
℄	CENTERLINE
CONC	CONCRETE
DE	DRAINAGE EASEMENT
EOP	EDGE OF PAVEMENT
EOW	EDGE OF WATER
FFE	FINISHED FLOOR ELEVATION
FND	FOUND
ID	IDENTIFICATION NUMBER
IR	IRON ROD
LB	LICENSED BUSINESS
LS	LICENSED SURVEYOR
LME	LAKE MAINTENANCE EASEMENT
PC	POINT OF CURVATURE
PI	POINT OF INTERSECTION
PT	POINT OF TANGENCY
PK	PARKER KALON CONCRETE TYPE NAIL
PCP	PERMANENT CONTROL POINT
PSM	PROFESSIONAL SURVEYOR AND MAPPER
PCC	POINT OF COMPOUND CURVE
PUE	PUBLIC UTILITY EASEMENT
ROW	RIGHT-OF-WAY
TOB	TOP OF BANK
(C)	CALCULATED
(M)	AS FIELD MEASURED
(P)	PLATTED
(NR)	NON RADIAL LINE
(R)	RADIAL
	INDICATES CONCRETE

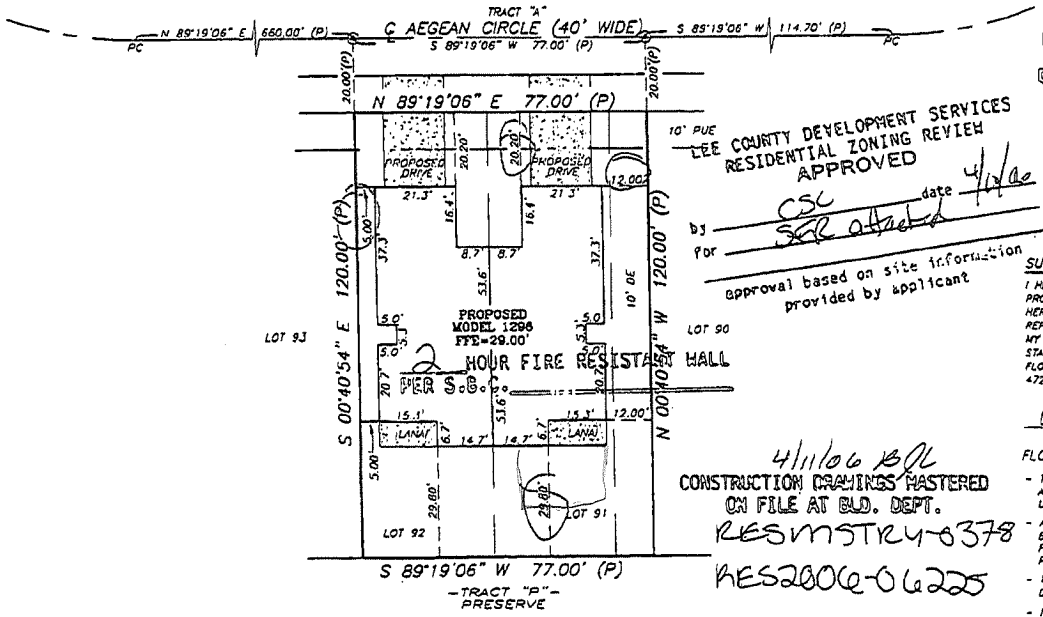

MUST MAINTAIN 10' OFF-SITE STRUCTURES

LEE COUNTY DEVELOPMENT SERVICES
RESIDENTIAL ZONING REVIEW
APPROVED
by CSC
for SCR attached
date 4/11/06

approval based on site information provided by applicant

4/11/06 BJL
CONSTRUCTION DRAWINGS MASTERED ON FILE AT BLD. DEPT.
RES20060378
RES2006-06225

SURVEYOR'S CERTIFICATION:

I HEREBY CERTIFY TO THE BEST OF MY PROFESSIONAL KNOWLEDGE, THAT THIS PLAT OF THE HEREON DESCRIBED PROPERTY IS A TRUE REPRESENTATION OF A SITE PLAN MADE UNDER MY DIRECTION AND MEETS THE MINIMUM TECHNICAL STANDARDS SET FORTH IN CHAPTER: 61G17-6, FLORIDA ADMINISTRATIVE CODE, PURSUANT TO SECTION 472.027, FLORIDA STATUTES.

A. LEE HAYNE, P.S.M. DATE

FLORIDA CERTIFICATION NO. 6338

- THIS SITE PLAN IS NOT VALID WITHOUT THE SIGNATURE AND THE ORIGINAL RAISED SEAL OF A FLORIDA LICENSED SURVEYOR AND MAPPER.
- ADDITIONS OR DELETIONS TO SURVEY MAPS OR REPORTS BY OTHER THAN THE SIGNING PARTY OR PARTIES IS PROHIBITED WITHOUT WRITTEN CONSENT OF THE SIGNING PARTY OR PARTIES.
- THIS CERTIFICATION IS ONLY FOR THE LANDS DESCRIBED HEREON.
- IT IS NOT A CERTIFICATION OF TITLE, ZONING, SETBACKS, OR FREEDOM OF ENCUMBRANCES.
- THIS SITE PLAN WAS PREPARED WITHOUT BENEFIT OF ABSTRACT OF TITLE AND ALL MATTERS OF TITLE SHOULD BE REFERRED TO AN ATTORNEY AT LAW.

Banks Engineering
Professional Engineers, Planners & Land Surveyors
FORT MYERS • NAPLES • SARASOTA • CHARLOTTE
11040 CHARLES RENAUD
FORT MYERS, FLORIDA 33913
PHONE: (239) 454-3313 FAX: (239) 454-3353
ENGINEERING LICENSE # EB 6469

SITE PLAN FOR:
KB HOME FORT MYERS LLC
LEE COUNTY, FLORIDA

DATE	PROJECT	DRAWING	DRAWN	CHECKED	SCALE	SHEET	OF	FILE NO. (S-T-R)
7-08-2005	24.07	2107-TP	GT	ALH	1"=30'	1	1	6-45-27

ADD2018-00039 Lee County ePlan

